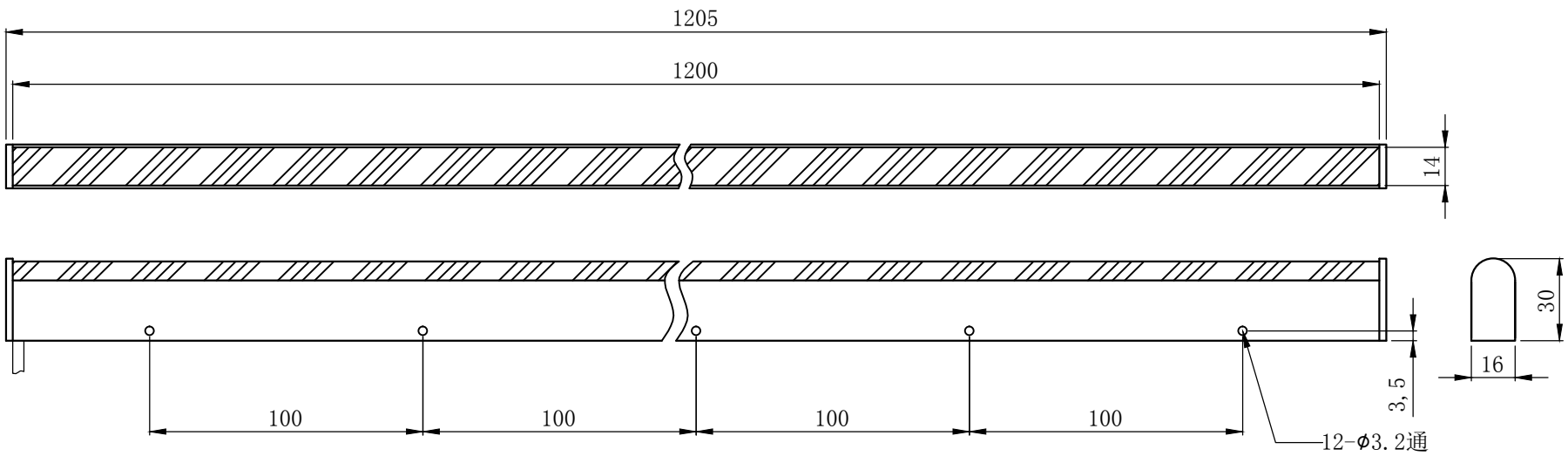

SPECIFICATIONS PARAMETER			
OPERATING VOLTAGE	DC24V	WAVELENGTH OF LIGHT	IR 850 nm
RATED CURRENT	IR、R/W、G、B、V 2.4/3.6A		R 620–625nm
RATED POWER	IR、R/W、G、B、V 57.6/86.4W		G 520–530nm
PEAK CURRENT	IR、R/W、G、B、V 4.8/7.2A		B 465–470nm
PEAK POWER	IR、R/W、G、B、V 115.2/172.8W		V 365–400nm
			W 6500–7000K

HGS	PART NAME	HGS1200LSHL16	DATE	2015-11-25
			DWN. BY	
	UNIT: mm	TITLE DRAWING LAYOUT	CHKD. BY	
			APPD. BY	
			DWG. NO	