Refer to protection notice ISO 16016
The reproduction, distribution and utilization of this document as well as the communication of its contents to others without express authorization is prohibited. Offenders will be held liable for the payment damges. Allrigths reserved in the event of the grant of a patent, utility model or design.

参照ISO 16016保护条例
本图纸未经许可不得复制，传播与使用，不允许擅自与他人交流其内容。
违者必究，并须赔偿损失。保留发明，实用新型以及外观设计专利的所有权。

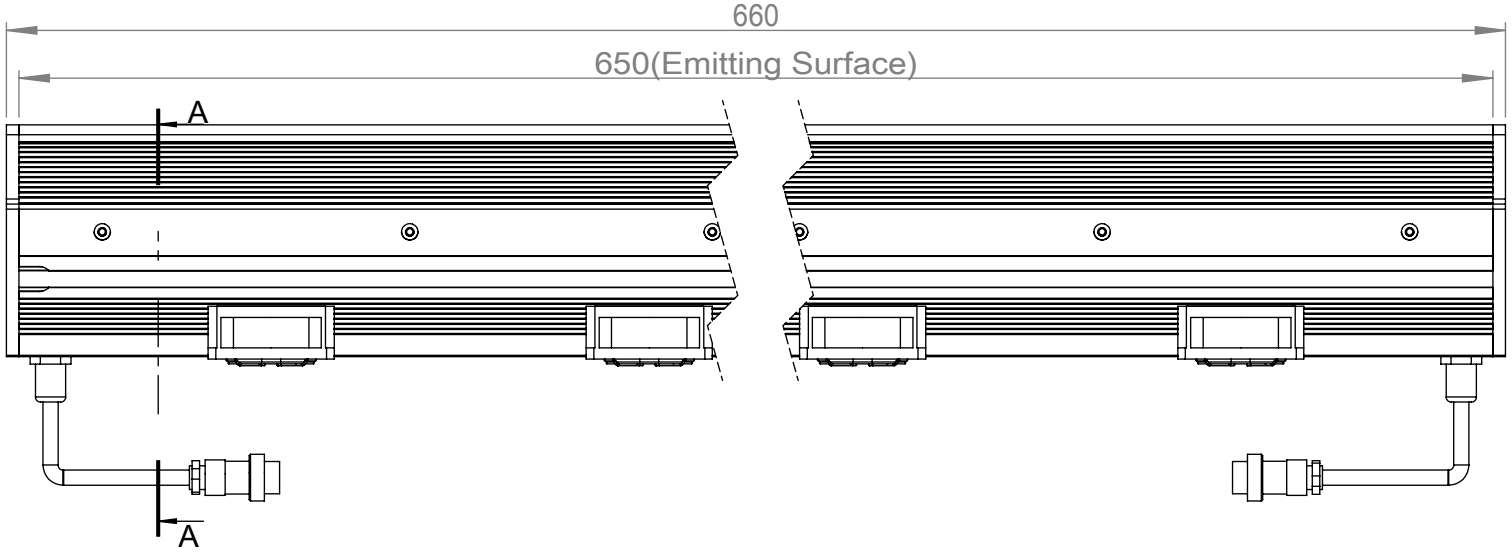

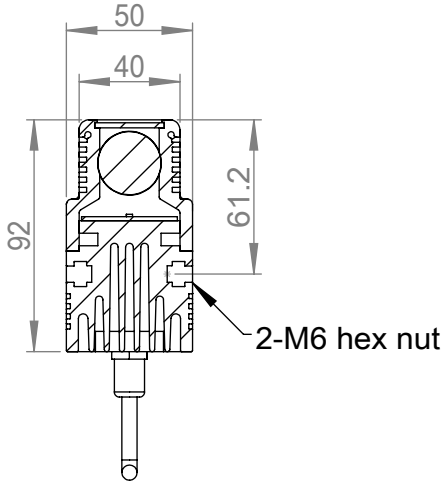

剖面 A-A

SPECIFICATIONS PARAMETER	
OPERATING VOLTAGE	DC24V
RATED CURRENT	5.2A
RATED POWER	124.8W
WAVELENGTH OF LIGHT	W 6500-7000K

HGS	PART NAME	HGS650LSHD25F	DATE 2019-04-29
	UNIT : mm	TITLE DRAWING LAYOUT	DWN.BY
	1:3		CHKD.BY
			APPD.BY
			DWG.NO