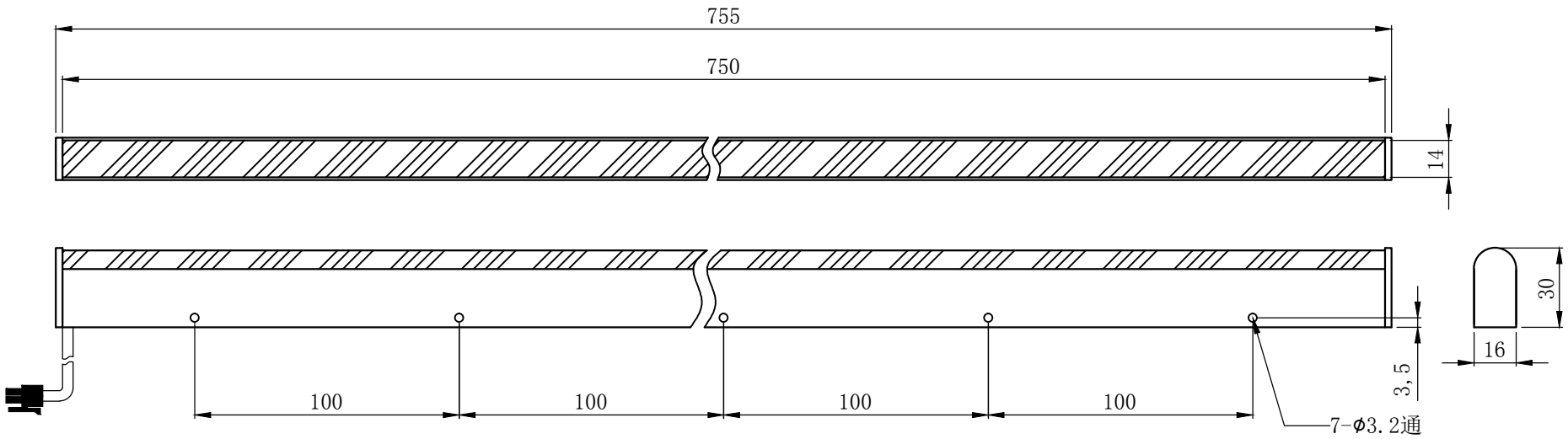

SPECIFICATIONS PARAMETER				
OPERATING VOLTAGE	DC24-26V	WAVELENGTH OF LIGHT		
RATED CURRENT	R/W、G、B、V 1.5/2A		R	620-625nm
RATED POWER	IR/W、G、B、V 36/48W		G	520-530nm
PEAK CURRENT	R/W、G、B、V 3/4.5A		B	465-470nm
PEAK POWER	IR/W、G、B、V 72/108W		V	365-400nm
			W	6500-7000K

HGS

PART NAME	HGS750LSHL16	DATE	2015-11-25
		DWN. BY	
UNIT: mm	TITLE DRAWING LAYOUT	CHKD. BY	
		APPD. BY	
		DWG. NO	