Rev No.	Description	Date	Name

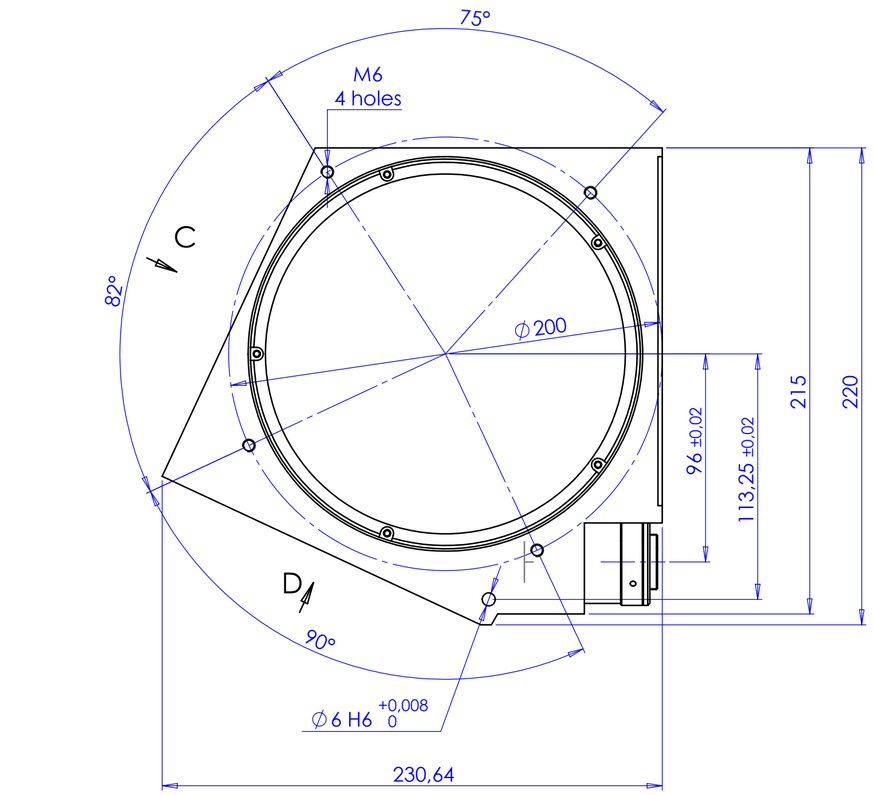

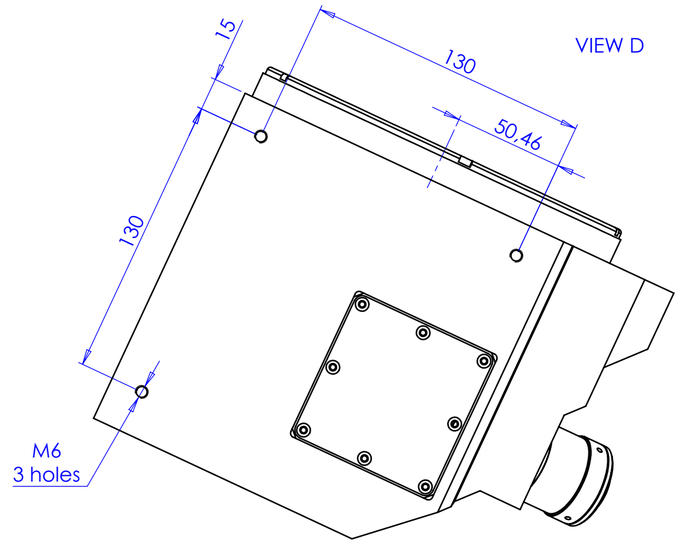

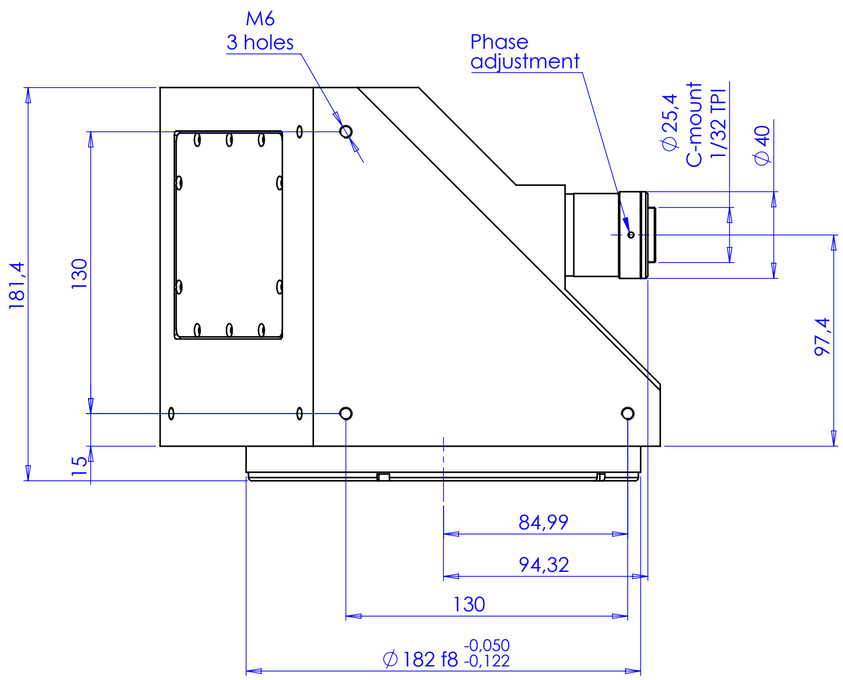

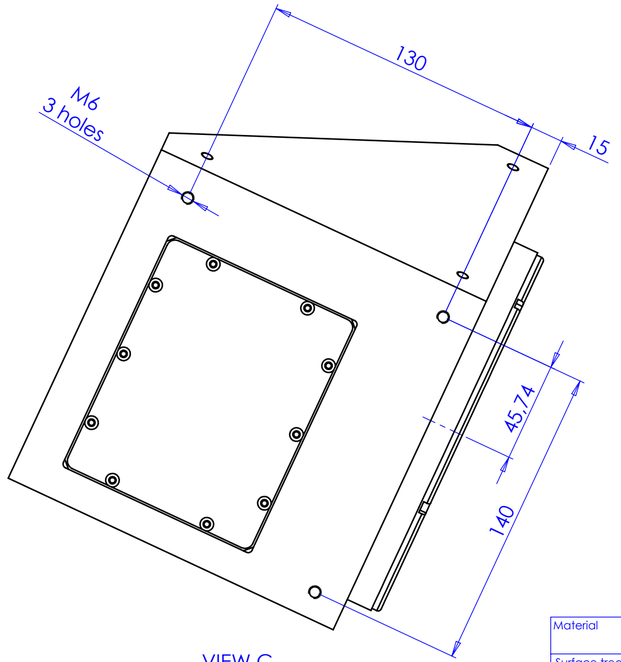

VIEW C

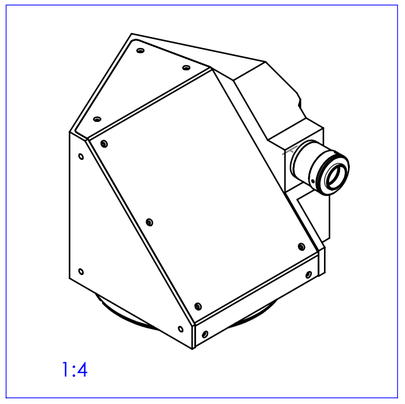

Material	N.A.	Mass	9749 g
Surface treatment	N.A.	Scale	1:2
Part No.	CO25887		
Description	TCCR23120		
Drawing No.	DP 25887-A	Sheet	1/1

Geometrical tolerance (ISO 2768-2) Class K
Linear tolerance (ISO 2768-2) Class m

0.5 ÷3	>3÷ 6	>6÷ 30	>30÷ 120	>120 ÷400	>400÷ 1000	>1000 ÷2000	>2000 ÷4000
±0.1	±0.1	±0.2	±0.3	±0.5	±0.8	±1.2	±2

Undimensioned bevels 0.5x45°
Undimensioned radii R 0.5

all dimensions are in mm

	Date	Name
Designed	14/03/2017	Vasconetto
Drawn	17/04/2018	Rodella
Checked		

OPTO ENGINEERING

OPTO ENGINEERING S.r.l. - Mantova Italy - Tel. +39 0376 699111 - www.opto-engineering.com

Secret and confidential - All rights reserved - No copy, dissemination or circulation is allowed unless specifically authorized in writing by OPTO ENGINEERING S.r.l. - Any violation shall be legally prosecuted.