Rev No.	Description	Date	Name
B	approvazione	15/07/2014	Rodella

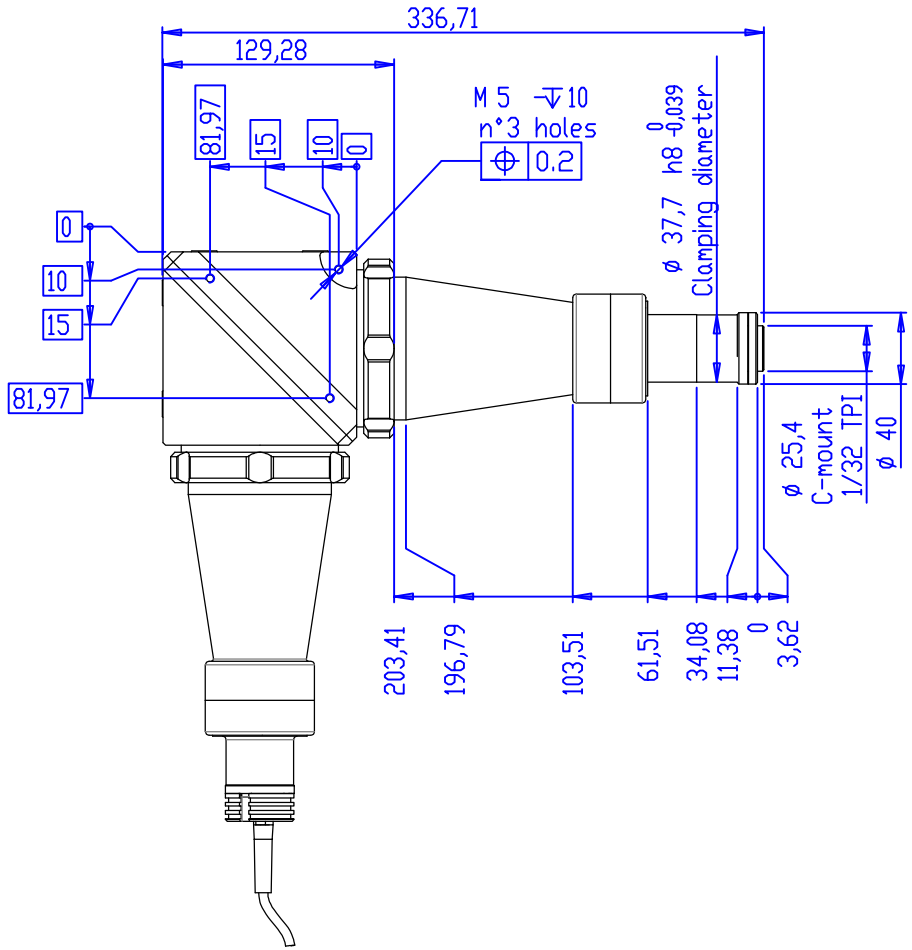

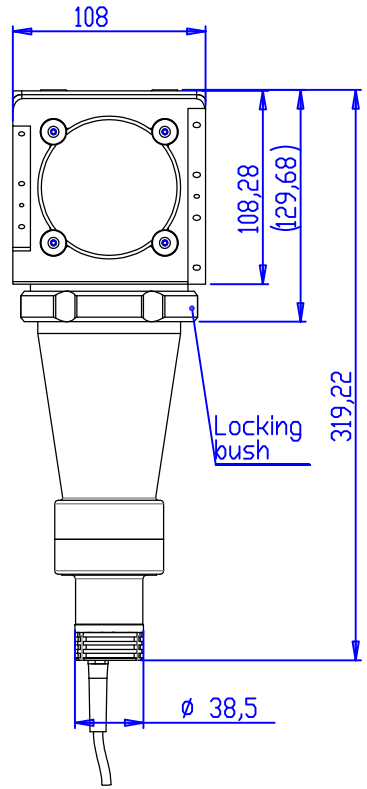

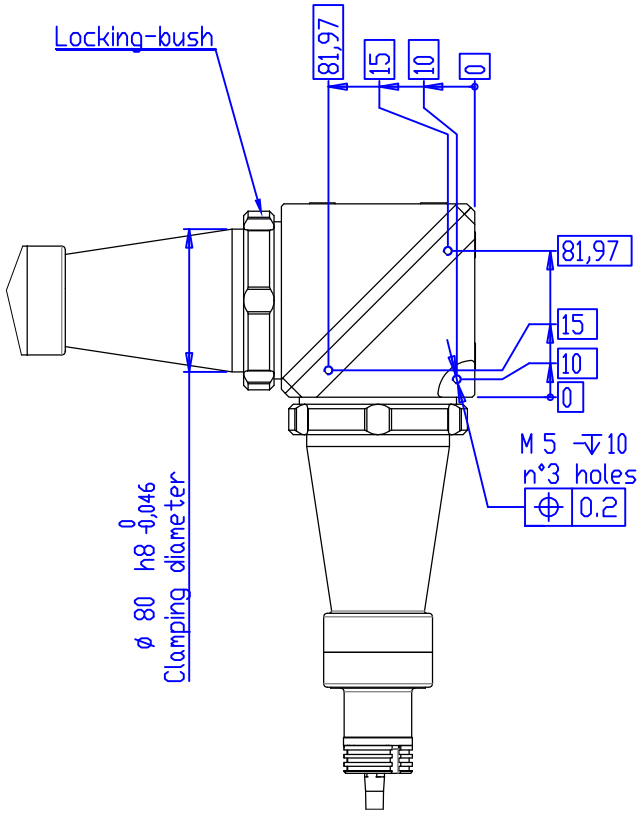

OPTO ENGINEERING
THE TELECENTRIC COMPANY

Material	N.A.	Mass	675 g
Surface treatment	N.A.	Scale	1:3
		Part No.	C□71660

Geometrical tolerance (ISO 2768-2)								Class	K	Undimensioned bevels	0.5x45°
Linear tolerance (ISO 2768-2)								Class	m		
0.5 +3	>3+ 6	>6+ 30	>30+ 120	>120 +400	>400+ 1000	>1000 +2000	>2000 +4000	Undimensioned radii	R 0.5		
±0.1	±0.1	±0.2	±0.3	±0.5	±0.8	±1.2	±2				

all dimensions are in mm

	Date	Name
Designed	03/07/2014	Rodella
Drawn	04/07/2014	Rodella
Checked		

Description: TCCXQ016-W

Drawing No.: DP 71660 -B

Sheet: 1/1

□PTO ENGINEERING S.r.l. - Mantova Italy - Tel. +39 0376 699111 - www.opto-engineering.com

Secret and confidential - All rights reserved - No copy, dissemination or circulation is allowed unless specifically authorized in writing by □PTO ENGINEERING S.r.l. Any violation shall be legally prosecuted.